nifty

Heightrider

Operating & Safety Instructions

MODEL HR21 (SP64) HYBRID SERIES AWD

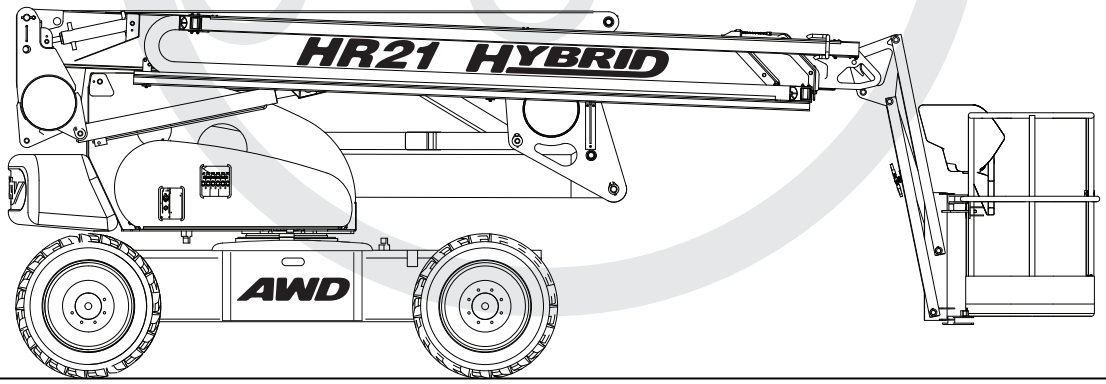

Manufactured by:
Niftylift Limited
Fingle Drive
Stonebridge
Milton Keynes
MK13 0ER
England

www.niftylift.com
e-mail: info@niftylift.com
Tel: +44 (0)1908 223456
Fax: +44 (0)1908 312733

niftylift.com
info@niftylift.com

nqa. ISO 9001 Registered
UKAS QUALITY MANAGEMENT 015

CE

M50371/02

Table of Contents

1	**INTRODUCTION AND GENERAL INFORMATION**	**PAGE**
1.1	Foreword	2
1.2	Severity of Hazards	2
1.3	Scope	3
1.4	Introducing the “Height Rider” Self Propelled (SP) Series	3
1.5	General Specification	4
1.6	Identification	5-6
1.7	EC Declaration of Conformity	7
2	**SAFETY**	
2.1	Mandatory Precautions	8-10
2.2	Environmental Limitations	11
2.3	Noise & Vibration	11
2.4	Test Report	12
3	**PREPARATION AND INSPECTION**	
3.1	Unpacking	13
3.2	Preparation for Use	13
3.3	Pre-Operational Safety Check Schedules	14-16
3.4	Placard, Decals and Installation	17-20
3.5	Torque Requirements	21
4	**OPERATION**	
4.1	Control Circuit Components	22-24
4.2	Ground Control Operation	25-26
4.3	Platform Control Operation	27-30
4.4	Driving Controls	32-32
4.5	Cage Weigh System	33
4.6	Batteries and Charging	34-36
4.7	Transporting, Craneage, Storage and Setting to Work	37-39
5	**EMERGENCY CONTROLS**	
5.1	General	40
5.2	Emergency Procedures - Incapacitated Operator	40
5.3	Emergency Procedures - Machine Failure	40
5.4	Boom Controls	41
5.5	Towing	42
5.6	Incident Notification	43
6	**RESPONSIBILITIES**	
6.1	Changes in Ownership	43
6.2	Manual of Responsibilities (USA only)	43
6.3	Inspection/ Service Check List	44-45

1 Introduction and General Information

1.1 FOREWORD

The purpose of this manual is to provide the customer with safety, operating and maintenance instructions essential for proper machine operation.

This manual should be READ and fully UNDERSTOOD before any attempt is made to operate the machine!

Niftylift has no direct control over the machine's application and use, therefore conformance with good safety practices is the responsibility of the user and operating personnel.

These manuals are very important tools - Keep them with the machine at all times.

All information in these manuals is based on the use of the machine under proper operating conditions. **Alteration and/or modification of the machine are STRICTLY FORBIDDEN.**

Remember: Any equipment is only as safe as those who operate it!

1.2 SEVERITY OF HAZARDS

The use of this type of equipment presents certain dangers to the operator which is clearly identified both in this manual and on the machine. The varying levels of risk are defined as follows:

DANGER

If not correctly followed there is a high probability of serious injury or death to personnel.

WARNING or CAUTION

If not correctly followed there is some possibility of serious injury or death to personnel.

The 'Safety Alert Symbol' is used to call attention to potential hazards which may lead to serious injury or death, if ignored.

IMPORTANT and INSTRUCTIONS

This denotes procedures essential to safe operation and prevention of damage to, or destruction of the machine.

NOTICE

This indicates general safety rules and/or procedures relating to the machine.

It is the owner's/user's responsibility to know and comply with all applicable rules, regulations, laws, codes and any other requirements applicable to the safe use of this equipment.

1.3 SCOPE

These operating instructions contain all the necessary information required to allow the safe operation of any Niftylift Height Rider 21 Hybrid (SP64 Hybrid in the USA), powered by diesel (D) and DC electric (E).

For further technical information, circuit diagrams and specific instructions for all maintenance which may need to be carried out by specialist trained personnel, see the associated Workshop and Parts manual for your model of Niftylift Height Rider.

1.4 INTRODUCING THE HEIGHT RIDER SELF-PROPELLED (SP) SERIES

Please note at the time of going to press all information, illustrations, details and descriptions contained herein are valid. Niftylift reserves the right to change, modify or improve its products without any obligations to install them on previously manufactured machines.

If, after reading this manual you require further information, please do not hesitate to contact us.

Niftylift Ltd, Fingle Drive, Stonebridge, Milton Keynes MK13 OER, Great Britain
Tel: +44 (0) 1908 223456 Fax: +44 (0) 1908 312733

Niftylift Inc, 32 Concourse Way, Greer, SC 29651 USA
Tel: +01 864 968 8881 Fax: +01 864 968 8836

Nifty Pty Ltd, 11 Kennington Drive, Tomago, NSW 2322, Australia
Tel: +61 (0) 2 4964 9765 Fax: +61 (0) 2 4964 9714

Driven from the platform, the Niftylift Height Rider 21 (SP64) Hybrid is an extremely versatile articulated boom platform of unique and simple design. It is capable of placing two men and their tools up to a height of 20.66m (67ft 9in) or an outreach of 12.60m (41ft 4in).

The compact narrow base and tight turning circle, powered slew, up and over capability, good outreach, combined with sensitive controls, ensure excellent manoeuvrability and maximum efficiency.

High traction tyres and powerful hydraulic wheel motors give unsurpassed performance with the option of fast drive speed when the booms are in the stowed position. Automatic braking and audible alarms activated by a four-degree tilt sensor help to prevent the operator from working on unsafe terrain whilst elevated.

The Niftylift Height Rider 21 Hybrid provides a fast, safe, cost effective method of access, both inside and out, for a multitude of applications where overhead working is required. It operates from either battery or diesel power via an electric motor or diesel engine, both of which are coupled to a single hydraulic pump.

Models include the following

DE: - BI-ENERGY (DIESEL & BATTERY)

1.5 GENERAL SPECIFICATION

FEATURE	HR21 (SP64) HYBRID AWD
MAXIMUM HEIGHT - WORKING	20.66m 67ft 9in
MAXIMUM HEIGHT - PLATFORM	18.70m 61ft 4in
MAXIMUM OUTREACH	12.60m 41ft 4in
MAXIMUM HEIGHT – STOWED	2.15m 7ft
MAXIMUM WIDTH	2.25m 7ft 5in
MAXIMUM LENGTH – STOWED	5.00m 16ft 5in
PLATFORM CAPACITY - Europe	225kg (500lbs)
WHEELBASE	2.30m 7ft 6in
TURNING RADIUS – OUTSIDE	3.97m 13ft
TURRET ROTATION	355^0
TURRET TAIL SWING	0.49m 1ft 7in
TRAVEL SPEED	**(2WD)** 0 – 2.8mph 0 – 4.5kph **(AWD)** 0 - 1.4mph 0 – 2.25kph
PLATFORM SIZE	1.80m x 0.70m 5ft 11in x 2ft 2in
CONTROLS	Proportional electric over hydraulic
HYDRAULIC PRESSURE	280bar
TYRES	Solid
GRADEABILITY	40%
MINIMUM VEHICLE WEIGHT	6,300kg 13,889lb
MAXIMUM GROUND PRESSURE	$0.1065kn/cm^2$ $22,244lb/ft^2$
POWER SOURCE	DE (Diesel & Battery) - Kubota 722 engine and 8 x 6v 350 AH batteries

1.6 IDENTIFICATION (UK PLATE)

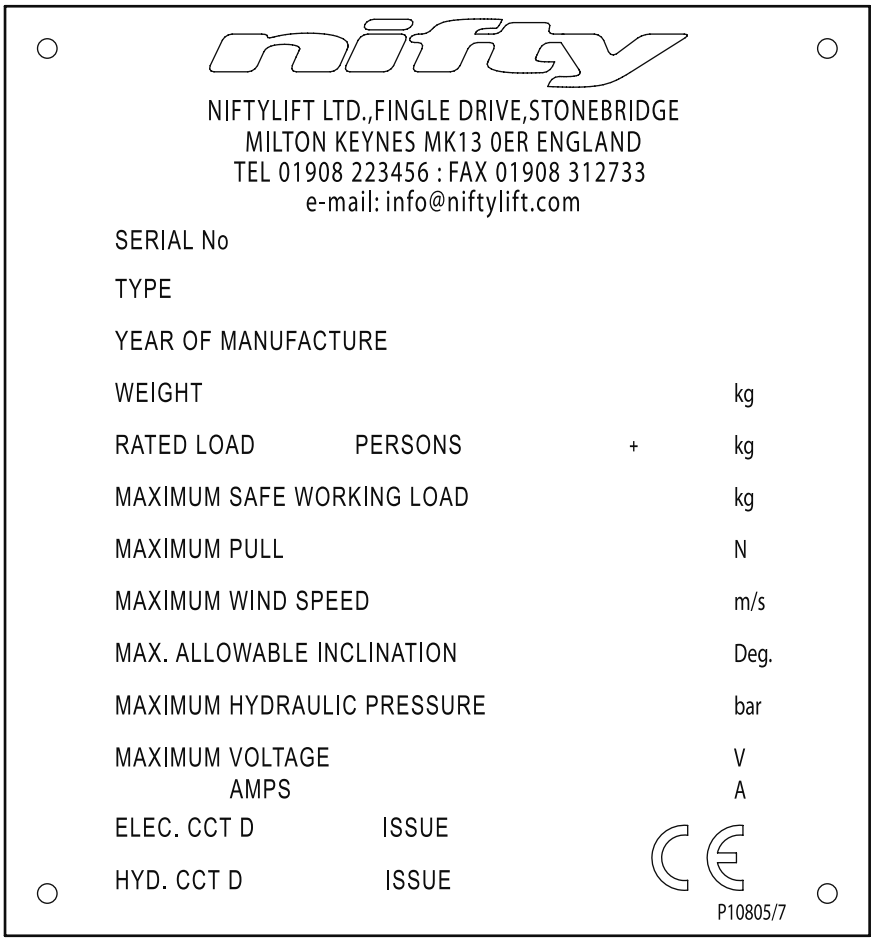

This manufacturer's plate is attached to the chassis of each machine at the time of manufacture on every Niftylift. Please ensure all sections have been stamped and are legible.

1.6a IDENTIFICATION (USA PLATE)

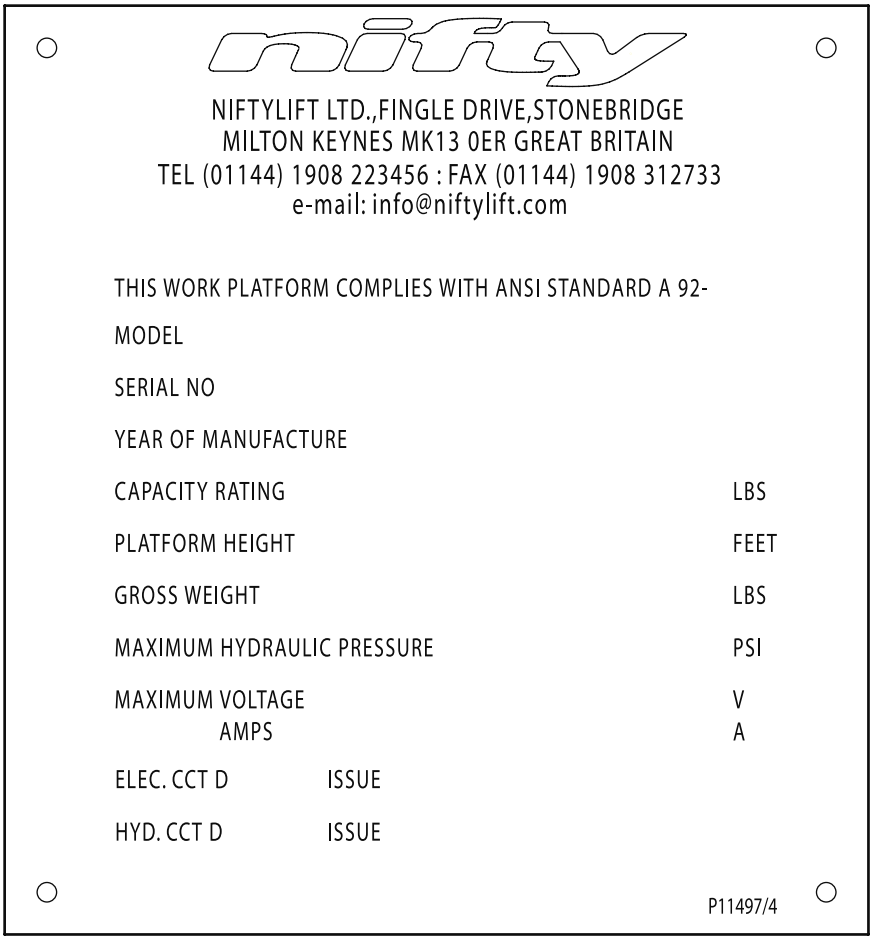

This manufacturer's plate is attached to the base of each machine at the time of manufacture on every Niftylift. Please ensure all sections have been stamped and are legible.

1.7 EC DECLARATION OF CONFORMITY (Typical)

EC DECLARATION OF CONFORMITY

MANUFACTURER AND PERSON RESPONSIBLE FOR DOCUMENTATION:	**NIFTYLIFT LTD** **MALCOLM NORTH**
ADDRESS:	**FINGLE DRIVE,** **STONEBRIDGE,** **MILTON KEYNES,** **MK13 0ER,** **ENGLAND.**
MACHINE TYPE:	MOBILE ELEVATING WORK PLATFORM
MODEL TYPE:	
SERIAL NUMBER:	
NOTIFIED BODY:	RWTUV Anlagentechnik GmbH
NOTIFIED BODY NUMBER:	0044
ADDRESS:	POSTFACH 10 32 61 D-45141 ESSEN GERMANY
CERTIFICATE NUMBER:	
APPLICABLE STANDARDS:	EN 280:2001+A2:2009 DIN EN 60204-1, 2006/42/EC

We hereby declare that the above mentioned machine conforms with the requirements of the Machinery Directive, 2006/42/EC and EMC Directive 2004/108/EC

SIGNED: M.D. North DATE: 14th December 2009

NAME: Malcolm North POSITION: Engineering Manager

NOTE:
THIS DECLARATION CONFORMS WITH THE REQUIREMENTS OF ANNEX II-1.A OF THE COUNCIL DIRECTIVE 2006/42/EC. ANY MODIFICATIONS TO THE ABOVE MENTIONED MACHINE WILL INVALIDATE THIS DECLARATION, AND THE MACHINE'S APPROVAL.

2 Safety

2.1 MANDATORY PRECAUTIONS

When operating your Niftylift, your safety is of utmost concern. In order to fully appreciate all aspects of the machine's operation it should be ensured that each operator has **READ** and fully **UNDERSTOOD** the relevant manual covering machine use, maintenance and servicing. If any doubts exist concerning any points covered in your manual, contact your local dealer or Niftylift Ltd.

Before using any Niftylift, thoroughly inspect the machine for damage or deformation to all major components. Likewise, check the control systems for hydraulic leaks, damaged hoses, cable faults or loose covers to electrical components. At no time should damaged or faulty equipment be used - Correct all defects before putting the platform to work. If in doubt, contact your local dealer or Niftylift Ltd (see page 3 for contact details).

THE MANUFACTURER HAS NO DIRECT CONTROL OVER THE MACHINE APPLICATION AND USE. THEREFORE CONFORMATION WITH GOOD SAFETY PRACTICES IS THE RESPONSIBILITY OF THE USER AND HIS OPERATING PERSONNEL. FAILURE TO UNDERSTAND AND FOLLOW ALL SAFETY RULES COULD RESULT IN SERIOUS INJURY OR DEATH.

2.1.1 Only trained persons are permitted to operate the Niftylift.

2.1.2 Always operate the Niftylift in full accordance with the manufacturer's Operating & Safety Instructions for that model.

2.1.3 Before use each day and at the beginning of each shift, the Niftylift shall be given a visual inspection and functional test including, but not limited to, operating and emergency controls, safety devices, personal protective clothing, including fall protection, air, hydraulic and fuel system leaks, cables and wiring harness, loose or missing parts, tyres and wheels, placards, warnings, control markings and Operating and Safety Manuals, guards and guard rail systems and all other items specified by the manufacturer.

2.1.4 Any problems or malfunctions that affect operational safety must be repaired prior to use of the platform, with specific regard to any safety components refer to the Parts Manual for part numbers and details. If in doubt, contact Niftylift Ltd (Details on page 3). **Ensure wheels are chocked before carrying out any maintenance that involves gearbox disengagement as described in Section 5.5.**

2.1.5 Always ensure that all warning labels, instructions, placards, control markings and safety manuals are intact and clearly legible. If replacements are required contact your local dealer or Niftylift. Always observe and obey safety and operating instructions on such labels.

2.1.6 Do not alter, modify or disable in any way the controls, safety devices, interlocks or any other part of the machine.

2.1.7 Before the Niftylift is used and during use the user shall check the area in which it is to be used for possible hazards such as, but not limited to, uneven ground drop-offs, holes, bumps, obstructions, debris, floor and overhead obstructions, high voltage conductors, wind and weather, unauthorised persons and any other possibly hazardous conditions.

2.1.8 Never exceed the maximum platform capacity, as indicated on the decals and machine serial plate.

2.1.9 Only operate the Niftylift on a firm, level surface.

2.1.10 Never position any part of the Niftylift within 4.0m, (12ft) of any electrical power line, conductor or similar not exceeding 66kV. (Minimum span 125m) Other distances for increased voltages and different spans are given in NZECP 34:1993.

THIS MACHINE IS NOT INSULATED.

If in doubt, contact the appropriate authorities

2.1.11 On entering the platform ensure that the drop down entry bar is closed afterwards.

2.1.12 Use of an approved safety belt and lanyard, hard hat and appropriate safety clothing is mandatory. Fasten harness to designated harness securing points within the platform and do not remove until leaving the platform whilst in the stowed position.

2.1.13

Always remain standing within the platform. Do not attempt to increase your height or reach by standing and/or climbing on the platform guard rails or any other object. **KEEP YOUR FEET ON THE PLATFORM FLOOR**. Do not sit, stand or climb on the guard rail, mid rail or boom linkage. Use of planks, ladders or any other devices on the Niftylift for achieving additional height or reach shall be prohibited.

2.1.14 Do not use the platform levelling system to artificially increase the outreach of the platform. Never use boards or ladders in the platform to achieve the same result.

2.1.15 Do not use the platform to lift overhanging or bulky items that may exceed the maximum capacity or carry objects that may increase the wind loading on the platform. (e.g. Notice boards etc.)

2.1.16 The Niftylift shall not be operated from a position on trucks, trailers, railway cars, floating vessels, scaffolds or similar equipment unless the application is approved in writing by Niftylift Ltd in Great Britain.

2.1.17 Always check that the area below and around the platform is clear of personnel and obstructions before lowering or slewing. Care should be taken when slewing out into areas where there may be passing traffic. Use barriers to control traffic flow or prevent access to the machine.

2.1.18 Stunt driving and horseplay, on or around the Niftylift, is not permitted.

2.1.19 When other moving equipment and vehicles are present, special precautions shall be taken to comply with local ordinances or safety standards established for the work place. Warnings such as, but not limited to, flags, roped off areas, flashing lights and barricades shall be used.

2.1.20 Before and during driving while the platform is elevated the operator shall maintain a clear view of the path of travel, maintain a safe distance from obstacles, debris, drop offs, holes, depressions, ramps and other hazards to ensure safe elevated travel. Maintain a safe distance from overhead obstacles.

2.1.21 Under all travel conditions the operator shall limit travel speed according to conditions of ground surface, congestion, visibility, slope, location of personnel and other factors causing hazards of collision or injury to personnel.

2.1.22 The aerial platform shall not be driven on grades, side slopes or ramps exceeding those for which the aerial platform is rated by the manufacturer.

2.1.23 It shall be the responsibility of the user to determine the hazard classification of any particular atmosphere or location. Aerial platforms operated in hazardous locations shall be approved and suitable for the duty. (See ANSI/NFPA 505-1987 where applicable).

2.1.24 The operator shall immediately report to his supervisor any potentially hazardous location(s) (environment) which become evident during operation.

2.1.25 If an operator encounters any suspected malfunction of the Niftylift or any hazard or potentially unsafe condition relating to capacity, intended use or safe operation, he shall cease operation of the Niftylift and request further information as to safe operation from his management, or owner, dealer or manufacturer before further operation of the Niftylift.

2.1.26 The operator shall immediately report to his superior any problems or malfunctions of the Niftylift, which becomes evident during operation. Any problems or malfunctions that affect the safety of operation shall be repaired prior to continued use.

2.1.27 The boom and platform of the Niftylift shall not be used to jack the wheels off the ground.

2.1.28 The Niftylift shall not be used as a crane.

2.1.29 The Niftylift shall not be positioned against another object to steady the platform.

2.1.30 Care should be taken to prevent rope, electric cords and hoses from becoming entangled in the aerial platform.

2.1.31 Batteries shall be recharged in a well-ventilated area free of flame, sparks or other hazards, which may cause explosion. Highly explosive hydrogen gas is produced during the charging process.

2.1.32 When checking electrolyte levels great care should be taken to protect eyes, skin and clothing. Battery acid is highly corrosive and protective glasses and clothing is recommended.

2.1.33 If the platform or elevating assembly becomes caught, snagged or otherwise prevented from normal motion by adjacent structure or other obstacles, such that control reversal does not free the platform, all personnel shall be removed from the platform safely before attempts are made to free the platform using ground controls.

2.1.34

When the machine is not in use always stow the booms correctly. **NEVER LEAVE THE KEYS IN THE MACHINE,** if it is to be left for any period of time. Use wheel chocks if leaving on an incline.

2.1.35 The engine must be shut down while fuel tanks are being filled. Fuelling must be done in a well-ventilated area free of flame, sparks or any other hazard that may cause fire or explosion. **PETROL (GASOLINE), LIQUID PROPANE AND DIESEL FUELS ARE FLAMMABLE.**

2.1.36

NEVER START THE NIFTYLIFT IF YOU SMELL PETROL (GASOLINE), LIQUID PROPANE OR DIESEL FUEL. THESE FUELS ARE HIGHLY FLAMMABLE

2.1.37 The operator shall implement means provided to protect against use by unauthorised persons.

2.1.38 Never remove anything that may affect the stability of the machine such as, but not limited to, batteries, covers, engines, tyres or ballast.

2.2 ENVIRONMENTAL LIMITATIONS

Unless specifically configured otherwise, the machine will have a short operational time in extreme temperatures such as freezers and cold storage, due to reduced battery performance. For electrical cables and components, the temperature must be within the range -5°C to 60°C.

The machine is limited in high temperatures because of the cooling requirement for engines and hydraulic oil. Coolant temperatures must be within the range -37°C to 110°C (at 50% mixture of water to anti-freeze). Oil temperature not to exceed –23°C to 93°C.

The recommended operational range for these machines is - 5°C to +40°C. Please contact Niftylift Ltd for special considerations if the machine is required to operate outside these temperatures.

Extended operation in dusty environments is not recommended, frequent cleaning will be necessary. All dust, dirt, salt encrustation, excess oil or grease should be removed. Deposits of paint or bitumen, particularly on legends or labels should be removed.

All standard Niftylift machines are rated for a wind speed of 12.5 m/s, which equates to 45kph / 28mph or force 6 on the Beaufort scale. No attempt should be made to operate a Niftylift in wind strengths above this limit and if the operator has any doubts over the wind speed he / she should cease operation immediately until it can be established that the wind speed has fallen to a safe level.

DO NOT USE THE NIFTYLIFT IN ELECTRICAL STORMS

2.3 NOISE AND VIBRATION

The airborne noise emission on the Height Rider range of machines does not exceed 79dB(A), measured at a perpendicular distance of 4m, under equivalent continuous A-weighted sound pressure test conditions. This was based on a Diesel powered machine, working on high throttle, and under load. All other models will exhibit significantly lower emissions than this figure, dependant on power option. In normal operation the Vibration level to which the operator is subjected will not exceed a weighted root mean square acceleration value of 2.5 m/s^2.

2.4 TEST REPORT

All Niftylift machine models are subjected to a comprehensive 'type test' which duplicates all combinations of safe working load (SWL), overload, windage, inertia and pull force to assess the various safe stability criteria. Self propelled machines are also subjected to kerb and braking tests at the SWL to satisfy additional 'worse case' stability requirements.

Each individual machine is then subjected to static overload tests on flat level ground with 150% of the SWL, exceeding the requirements of EN280 for power operated MEWPs. Self propelled machines are also tested at the maximum working angle **plus** 0.5º with a test load of 125% of the SWL. Finally, on all machines, a functional test is performed with 110% of SWL.

All safety devices are checked for correct operation, operating speeds are checked against benchmark figures and the dynamic functions ensure that all acceleration and deceleration forces are within acceptable limits. All noted defects are rectified and recorded before the machine is permitted to enter into service.

3 Preparation and Inspection

3.1 UNPACKING

Since the manufacturer has no direct control over the shipping or carriage of any Niftylift it is the responsibility of the dealer and/or owner and/or lessee to ensure the Niftylift has not been damaged in transit and a Pre-operational Report has been carried out by a qualified engineer before the aerial platform is put into service.

A) Remove all ropes, straps and or chains used to secure the aerial platform during transit.

B) Ensure any ramp, loading dock or forklift used is capable of supporting or lifting the aerial platform.

C) If the aerial platform is to be driven off, please ensure that the operator has read and fully understood this entire manual. Refer to the appropriate section for precise operating instructions.

*****Carry out the Pre-operational Report before placing machine in service.**

3.2 PREPARATION FOR USE

Whilst every effort has been made at the Niftylift factory to ensure your machine arrives in a safe and operable condition it is necessary to carry out a systematic inspection prior to putting the aerial platform into service.

THIS IS NOT A REQUEST IT IS MANDATORY

To assist the user in this task you will find enclosed a Pre-operational Report, which must be filled out upon delivery/receipt of the machine.

Before the user carries out the Pre-operational Report he must have read and fully understood all the contents of the Operating, Safety and Maintenance Manual.

WARNING - DO NOT OPERATE A POTENTIALLY DEFECTIVE OR MALFUNCTIONING MACHINE. CORRECT AND REPAIR ANY DEFECTS BEFORE OPERATING YOUR NIFTYLIFT.

MACHINE STABILITY

The machine requires battery mass for stabilisation. If the batteries or any other significant component have been removed, **the machine will be unstable**. Contact Niftylift, UK before removal or replacement of any significant component.

3.3 PRE-OPERATIONAL SAFETY CHECK SCHEDULES

Before use each day and at the beginning of each shift the aerial platform shall be given a visual inspection and functional test including, but not limited to, the following:

3.3.1 DAILY SAFETY CHECKS

1) Check that all labels (decals) are in place and legible.
2) Visually inspect the machine for damaged or loose components.
3) Check that batteries are charged (Refer to Section 4.6 for further information).
4) Check the fuel level (if applicable).
5) Check that canopies/covers and guards are in place and secure.
6) Check that the boom rest switch is operable (if applicable).
7) Check that control levers are secure and operate freely.
8) Check that operating buttons and emergency stop buttons function properly.
9) Check the operation of the manual hand pump.
10) Visually inspect all hydraulic hoses and fittings for damage or leaks.
11) Check that the platform pivot pins and their tag bolts are secure.
12) Check that the tilt alarm is functioning properly (On a slope of 4^0 or more the alarm should sound and drive should be disabled).
13) Check the operation of the cage weigh system. See section 4.5.3 for testing and verification procedure.

3.3.2 WEEKLY SAFETY CHECKS

1) Inspect tyres and wheels for damage and wear.
2) Check that the joystick manipulators are secure.
3) Check battery fluid levels and specific gravity (after charging) and general condition.
4) Check hydraulic oil level, ISO Grade 22 (European), Grade 32 (Rest of World).
   Note; Tank is pressurised; therefore air will be released if filler cap is removed.
5) Inspect the engine air filter and clean or replace if necessary.
6) Inspect hose track for damage or missing parts.

3.3.3 MONTHLY SAFETY CHECKS

1) Check the engine oil level (if applicable).
2) Check the wheel nuts (torque 110ft lbs / 150Nm).
3) Check that the bolts holding the wheel motors to the chassis are secure.
4) Check that the slew worm/pinion is secured and correctly in mesh. Clean and re-grease.
5) Inspect brakes for operation and wear.
6) Inspect the engine fuel tank for damage or leaks.
7) Check telescopic boom wear pads and nylon studs (if applicable).
8) Check and adjust if necessary the Nylatron studs around the telescope boom.
9) Every **Six** months perform a **thorough examination** in accordance with the 'Lifting Operation and Lifting Equipment Regulations' (LOLER) 1998, Regulation (9)(3)(a).

3.3.4 ANNUAL SAFETY CHECKS

1) Check that all pivot pins and their tag bolts are secure.
2) Inspect for any cracks or badly rusted areas on booms and chassis.
3) Change the hydraulic oil filters and suction filter (Inside tank).
4) Check that slew ring bolts are secure (torque 220ft lbs. 300Nm).

Toughcage

Niftylift **tough**cage is fully UV stabilised for outdoor use in the most demanding climates. However, the user and machine owner should consider the following;

- Discolouration of the material may occur; this is a natural aging process which does not significantly alter the material properties.
- Degredation to the floor may occur as a consequence of product use and effect of UV exposure. The **tough**cage's multi-layer construction means degradation of the top surface may occur over time without compromising the structural strength of the internal and base layers.
- The rate at which the **tough**cage floor ages is dependant upon the machines application and its country of use (Typical levels of UV exposure). Refer to table below for aging rate applicable to your specific area.

UK, NETHERLANDS, GERMANY, POLAND, SCANDINAVIA, CANADA, RUSSIA	14 years
FRANCE, ITALY, USA (NORTH EAST STATES)	11 years
SPAIN, GREECE, TURKEY, CHINA, USA (MID WEST STATES), AUSTRALIA (TASMANIA)	9.5 years

MALAYSIA, INDONESIA	8 years
USA (SOUTH STATES), SOUTH AMERICA, AUSTRALIA (VICTORIA, NEW SOUTH WALES)	7.5 years
USA (WEST STATES), SOUTH AFRICA, INDIA, PAKISTAN, IRAN, AUSTRALIA (WESTERN, SOUTH, QUEENSLAND)	7 years
NORTH AFRICA, SAUDI, DUBAI, AUSTRALIA (NORTHERN TERRITORY)	6 years

Note: The date of manufacture of the **tough**cage floor is located on its underside.

Niftylift recommends that the user and machine owner regularly inspect the toughcage floor for damage. If any significant damage is found then the floor must be replaced. For further guidance please contact Niftylift Limited.

3.4 PLACARD, DECALS & INSTALLATION (UK SPEC)

ITEM	DESCRIPTION		NUMBER	QTY
1	“Niftylift.com”		P14390	1
2	Harness Point		P14883	2
3	Head Protection		P14921	1
4	Danger HR & TM’s		P21970	2
5	“If E-Stop Disabled		P14864	2
6	Hydraulic Oil		P14415	1
7	SWL 225kg		P17328	1
8	Manual Hand Pump		P19605	1
9	Daily Safety Check List		P14908	1
10	“If Tilt Alarm Sounds”		P14868	2
11	Cage Gate Warning		P18335	1
12	Hand Crush – Pictorial		P14782	4
13	Travel Direction		P14784	1
14	Serial Plate		P15383	1
17	Tie-Down Point		P14958	4
18	Hydraulic Levers - Base		P22815	1
19	Hydraulic Levers – Cage		P19747	1
20	“AWD” Logo		P21771	2
21	“HR21 Hybrid” Logo		P21770	2
22	Battery drain		P19850	1
23	Footswitch		P14884	1
24	No Step		P14785	4
25	General Notice HR’s		P18870	1
26	Control Buttons – Cage		P20663	1
28	Diesel		P14414	1
30	Operating Instructions		P14892	1
31	Noise Warning		P17124	1
32	Control Buttons – Base		P21750	1
33	Overload Warning		P18848	2
35	Trip – Push to Reset		P19056	1
36	Point Loading		P15215	4
37	“Raise Flyboom”		P19442	1
39	Power Inlet	110v	P17719	1
		220v	P17720	1
40	Chain Inspection		P16535	1
41	HR21 Slew Pin		P18587	2
42	Charger Socket		P19699	1
43	Charger Warning		P14904	1
44	Battery Isolator		P18600	1
46	Gearbox Disengage		P19180	2
47	Component Stability		P19708	2

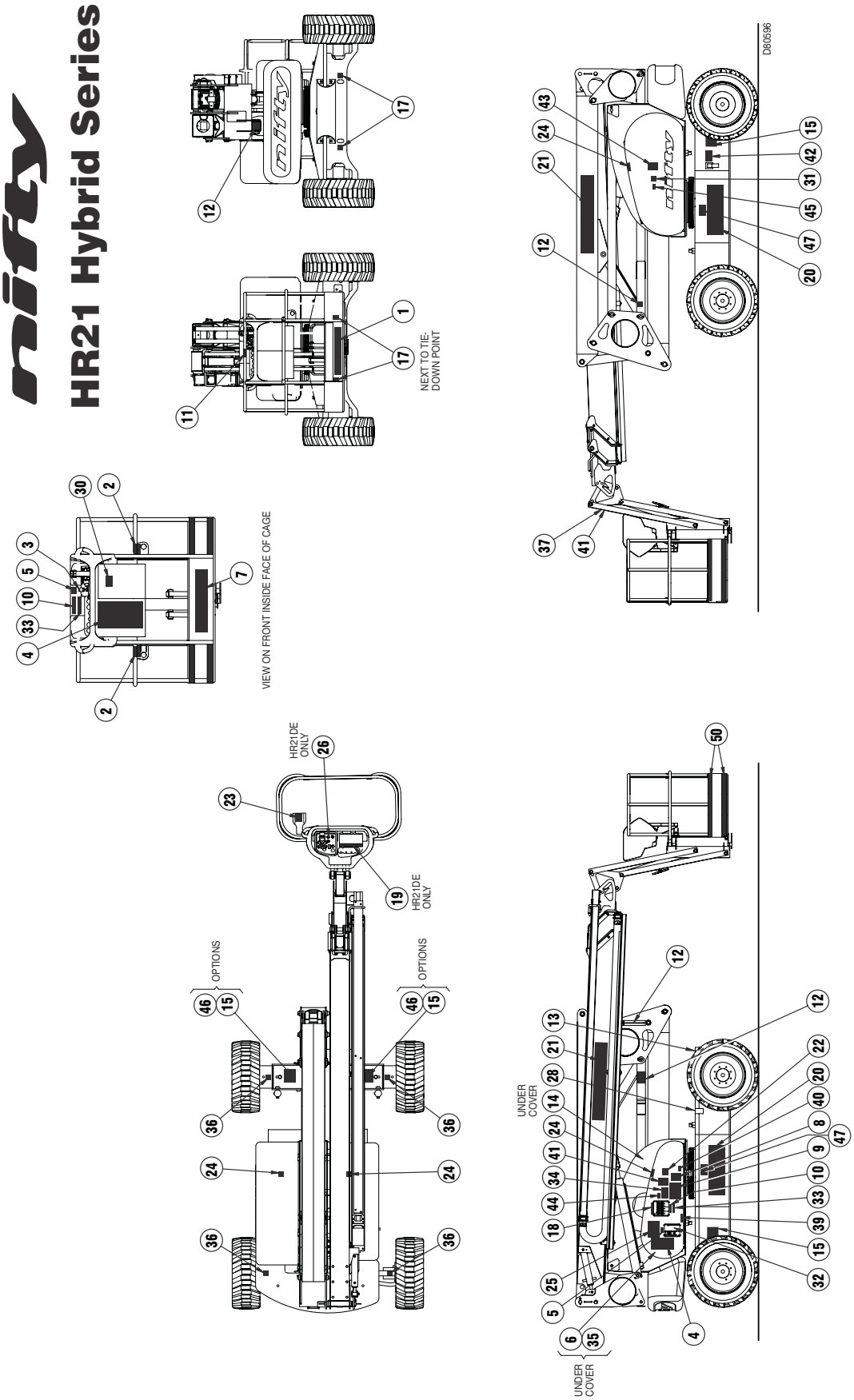
nifty
HR21 Hybrid Series
NEXT TO TIE-DOWN POINT
VIEW ON FRONT INSIDE FACE OF CAGE
D80596
HR21DE ONLY
HR21DE ONLY
OPTIONS
OPTIONS
UNDER COVER
UNDER COVER

3.4a PLACARD, DECALS & INSTALLATION (USA SPEC)

ITEM	DESCRIPTION	NUMBER	QTY
1	“Niftylift.com”	P14390	1
2	Harness Point	P14883	2
3	Head Protection	P14921	1
4	Danger HR & TM’s	P21970	2
5	“If E-Stop Disabled	P14864	2
6	Hydraulic Oil	P14415	1
7	SWL 500 lbs	P17328	1
8	Manual Hand Pump	P19605	1
9	Daily Safety Check List	P14908	1
10	“If Tilt Alarm Sounds”	P14868	2
11	Cage Gate Warning	P18335	1
12	Hand Crush – Pictorial	P14782	4
13	Travel Direction	P14784	1
16	Oil Level Indicator	P14676	1
17	Tie-down point	P14958	4
18	Hydraulic Levers -Cage	P19747	1
19	Hydraulic Levers – Base	P19748	2
20	“AWD” Logo	P21770	2
21	“SP64 Hybrid” Logo	P21769	2
22	Battery drain	P19850	1
23	Footswitch	P14884	1
24	No Step	P14785	4
25	General Notice HR’s	P18870	1
26	Control Buttons – Cage	P20663	1
28	Diesel	P14414	1
30	Operating Instructions	P14892	1
31	Noise Warning	P17124	1
32	Control Buttons – Base	P21750	1
33	Overload Warning	P18848	1
34	Component Stability	P19708	1
35	Trip – Push to Reset	P19056	1
36	Point Loading	P15215	4
37	“Raise Flyboom”	P19442	1
39	110v Power Inlet	P17719	1
40	Chain Inspection	P16535	1
41	SP64 Slew Pin	P18587	2
42	Charger Point	P19699	1
43	Charger Warning	P14904	1
44	Battery Isolator	P18600	1
46	Gearbox Disengage	P18811	2
47	Component Stability	P19708	2

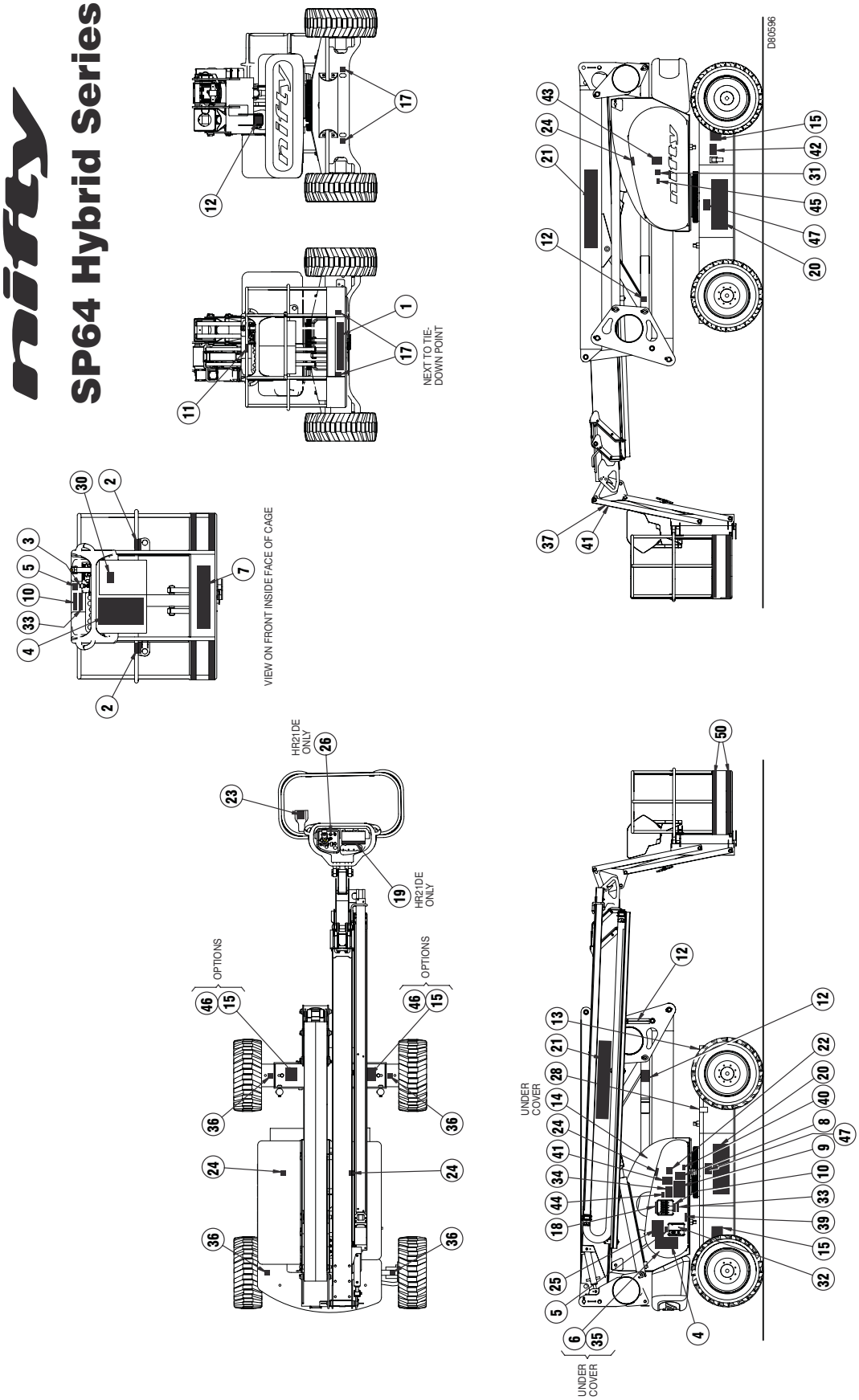
nifty
SP64 Hybrid Series
NEXT TO TIE-DOWN POINT
VIEW ON FRONT INSIDE FACE OF CAGE
D80596
HR21DE ONLY
HR21DE ONLY
OPTIONS
OPTIONS
UNDER COVER
UNDER COVER

3.5 TORQUE REQUIREMENTS

SCREW QUALITY/SIZE	Tightening torque in ft lbs (Nm)			
Grade		**8.8**		**10.9**
M 6	7.0	(10)	10	(14)
M 8	19	(25)	26	(35)
M 10	36	(49)	51	(69)
M 12	63	(86)	89	(120)
M 14	99	(135)	140	(190)
M 16	155	(210)	218	(295)
M 18	214	(290)	300	(405)
WHEEL NUTS	110ft lbs		150Nm	
WHEEL MOTOR NUTS	99ft lbs		135Nm	
SLEW RING BOLTS	220ft lbs		300Nm	

4 Operation

4.1 CONTROL CIRCUIT COMPONENTS

4.1.1 **MAIN CONTROL BOARD: -** Situated under the left-hand superstructure cover, the encapsulated control board comprises a PCB (printed circuit board) design which incorporates all of the relays to control the machine operation. The control boards are common to all models, and contain functions which might not be utilised on your particular machine.

4.1.2 **TILT ALARM: -** Fitted to the superstructure underneath the base controls cover, a solid state sensor which monitors the inclination of the machine. It directly controls the BRV (Brake Release Valve) and the Drive Flow Control valve. Also, if the platform is in use, i.e. Booms are raised, once the inclination exceeds the pre-set limit, it will disable the drive to the machine and sound the alarm. In order to recover the machine, the platform operation is unaffected, allowing the operator to restore drive when the machine is stowed. It is then possible to drive back onto level ground, fully restoring machine operation.

4.1.3 **MULTI-TONE SOUNDER: -** Situated on the side of the base control box is a small piezo electric sounder, which is used to provide an intermittent alarm whenever the machine is in operation. Pushing the green "power control" button or depressing the foot switch in the cage (if fitted) will energise this sounder. This serves to warn personnel of the operation of the machine.

This device also sounds to indicate a number of other machine conditions as follows;

Tilt Alarm: - If this sensor detects excessive inclination with the booms raised, it will sound continuously in conjunction with the tilt warning light (see Page 26).

Cage Weigh: - If the electronic load cell detects an overload condition it will sound continuously in conjunction with the cage overload warning light. Note; this also occurs on machine start for approximately 2 seconds during the load cell configuration sequence.

Battery management: - when a low battery state is reached, the "pulsing" of the D.C. motors is mimicked by the sounder reinforcing the message to the operator to charge the machine. Note; if the sounder activates whilst using electric power only, it is advisable to start the engine enabling the operator continued use of the machine, whilst recharging the batteries.

Fuel level: - the sounder will activate when the low fuel warning light illuminates.

4.1.4 **HORN: -** Also located on the back of the base control box is a horn. It can be used as a manual alert, by pushing the "Horn" button at the Platform control position.

4.1.5 **DRIVE CONTROL VALVE (DCV): -** The DCV is comprised of several individual components all directly involved in the hydraulic supply to the wheel drive motors. Principally, the drive control valves change the hydraulic motor displacement from High to Low and also controls switching between 2WD and 4WD (where applicable). This control function allows the operator to select both High Gradeability/Off Road Drive from High displacement, or High Drive (Hare) and Low Drive (Tortoise) from Low displacement.

4.1.6 **SUSPENSION CONTROL VALVE:** - This valve controls the cylinders on the unique suspension system. This system will only be active when the booms are in the down position and the telescope is retracted.

4.1.7 **BOOM-SWITCHES:** - Mounted on the tele-knuckle and links knuckle, and operated by any of the booms raising and/or the telescopic boom extending, these switches control both the operation of the Tilt Alarm Sensor, and the speed control function. With the booms in the stowed position, the Tilt Alarm Sensor is by-passed, allowing the machine to negotiate slopes in excess of the permissible working angle, without isolating the drive function. At the same time, High drive (Depicted by a Hare Icon) is possible, as is fast throttle on those machines so equipped. When the booms are raised or the telescope is out, the Tilt Alarm Sensor becomes activated, only slow speed operation is possible and only Low drive (Depicted by a Tortoise Icon) is permitted. When the booms are raised and the telescope out is engaged, the machine goes to a third slower speed. These control functions are of primary importance to safety of the machine and operator; **under no circumstances should this control function be isolated or by-passed.**

4.1.8 **BATTERY MANAGEMENT:** - Battery condition is permanently monitored by the control circuit, such that when available power has decreased to 20% of full charge, the battery status circuit begins to "chop" the power to the hydraulic motors. This function causes the drive system to stop & start alternately, signalling to the operator that re-charging is necessary. At the same time the sounder will begin to sound intermittently and the low battery warning light will illuminate, reinforcing the charge warning. At this point, sufficient power remains to drive to the nearest power point. Should the operator ignore the on-set of the discharge warning, the "chopping" will continue until the machine is rendered inoperative. Immediate charging will then be required.

Note; During normal machine usage with the engine running, the batteries are on continuous recharge which is indicated by a flashing light (refer to Section 4.2.1). The exception to this is when the control system decides that additional electric power is required in order to maintain drive/function speed. If the operator is using electric power only and a low battery warning has activated, it is advisable to start the engine, enabling continued use of the machine, whilst at the same time recharging the batteries.

Under no circumstances should a machine be left fully discharged or severe battery damage can occur in a relatively short time.

4.1.9 **BATTERY ISOLATOR:** - A battery disconnect plug is located beneath the base control canopy, which allows the machine control and power circuits to be isolated from the batteries themselves. Under normal operation, the machine Key switch should be used to isolate the machine, with the Battery plug only being required for emergencies to disconnect the batteries in the event of a short circuit, or during servicing of the machine to ensure that the power is disconnected.

On electric and bi-energy machines, the battery charging circuit is connected directly to the battery side, so charging is un-affected by use of this switch. The main battery pack is grounded to the chassis.

4.1.10 **DUTY SELECTOR:** - On multiple power option machines, the machine will default to electric power unless the diesel engine has been started.

4.1.11 **DIESEL ENGINE: -** A Kubota 722 engine described in the maintenance section of the Workshop Manual, driving a swash plate pump with integral relief valve on the main control valve. This arrangement allows two speed operation of all functions.

4.1.12 **HOUR METER: -** Monitors and displays time of diesel engine usage (Located on base control box).

4.1.13 **FUSES AND TRIP SWITCHES:** -

1) **325A** fuse inside front end of chassis, adjacent to battery charger (batteries).
2) **125A** fuse near the diesel engine battery (starter motor and alternator).
3) **15A** circuit breaker in main PCB box (main control system 12v).
4) **10A** circuit breaker in main PCB box. (main control system 48v).
5) **35A** circuit breaker in main PCB box (heavy duty circuit for diesel throttle/Glow plug).
6) **16A** circuit breaker in step-down unit.
7) **1A** fuse in battery canopy (Control side).

4.1.14 **LOAD SENSING CONSOLE (SiOPS™): -** This machine incorporates a load sensing cage console that senses if the operator has been pushed or has fallen against the console. If the load applied to the front of the console is greater than the pre-determined amount, the footswitch will be disabled to increase operator safety and reduce the possibility of sustained involuntary operation of the cage controls. For further information refer to Section 4.3.3.

4.2 GROUND CONTROL OPERATION

4.2.1 GROUND CONTROL FUNCTIONS

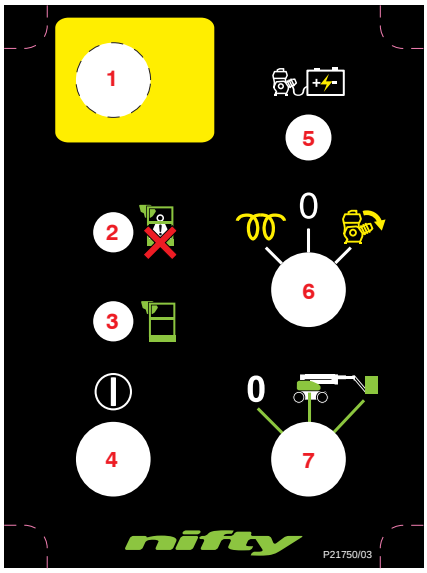

1 Emergency Stop	**Push** to Stop machine	**Turn clockwise** to Release
2 Cage Overload Indicator	Flashing red (Refer to Section 4.5)	
3 Cage Overload Indicator	Constant green (Refer to Section 4.5)	
4 Green Power Button	**Push** and hold to activate machine	
5 Battery Recharge Lamp	**Flashes** during machine operation to indicate batteries are being recharged	
6 Diesel Glow/Start Selector	Anti-clockwise for **Glow**, Clockwise to **Start** engine	
7 Base/Platform Selector	**Clockwise** for Platform, **Centre** for Base, **0** for all power off	

Base Levers

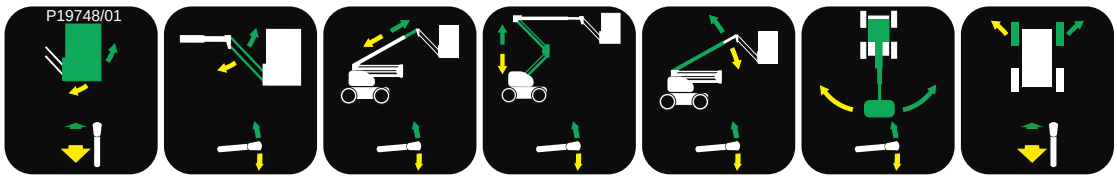

1 2 3 4 5 6 7

1 Operates Platform Levelling	Up for **Forward ****	Down for **Backward ****
2 Operates the Flyboom	Up for **Up**	Down for **Down**
3 Operates Telescoping	Up for **Tele Out**	Down for **Tele In**
4 Operates the Link Booms	Up for **Up**	Down for **Down**
5 Operates the Upper Boom	Up for **Up**	Down for **Down**
6 Operates Swing	Up for **Right**	Down for **Left**
7 Operates Front Wheel Steer	Up for **Right**	Down for **Left**

4.2.2 OPERATION

ALWAYS ALLOW THE ENGINE TO WARM UP BEFORE OPERATING.

ALL MODELS

1) Ensure all red emergency stops are out.
2) Turn **Base/Platform** selector at ground control station to **Ground** (Centre).
3) For **Battery** powered operation, go to step 7).
4) For **Diesel** powered operation, go to step 5).

DIESEL ENGINE

5) **COLD ENGINE**: - turn the **Diesel Glow/Start** selector to the **Glow** position (anti-clockwise). This engages the glow plug pre-heat system. Hold for 10 seconds then turn the key to the **Start** position (fully clockwise) and the engine will fire.
6) **WARM ENGINE**: - turn the **Diesel Glow/Start** selector to the **Start** position (clockwise) and the engine will fire.

Note: Unless the diesel engine is running, the HR21 Hybrid will automatically default to the electrical power source (battery).

ALL MODELS

7) Push and hold green power button on the base control box.
8) Select a function and operate the appropriate hydraulic lever in full accordance with manufacturers operating and safety manual.

   Note: Move lever until resistance is felt, then push/pull harder to activate function.
9) To return control to the platform turn the **Base/Platform** selector to the **Platform** position (clockwise).
10) When not in use return machine to stowed position, turn the **Base/Platform** selector anti-clockwise to the **Off** position, remove key and chock wheels.

EMERGENCY PROCEDURES

1) Push in red emergency stop to shut down all functions.
2) In the event that the controls fail or the operator becomes incapacitated the booms can be operated by using the hand pump which is located under the canopy next to the base controls. To operate:
   a) Move and hold lever to be operated.
   b) Use hand pump lever to move machine.
   c) Release control lever to halt machine movement.

4.3 PLATFORM CONTROL OPERATION

4.3.1 PLATFORM CONTROL FUNCTIONS

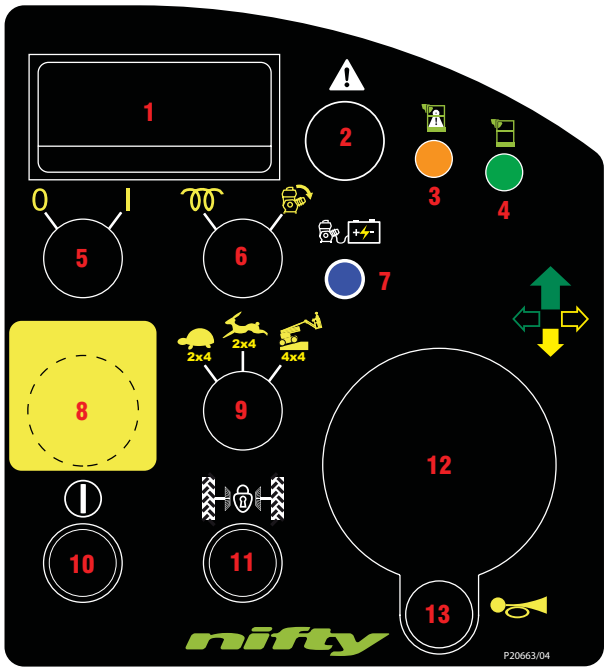

1 Digital Gauge	See diagram on page 28	
2 Safety Warning Lamp	Indicates Safety Critical Problem (Refer to Digital Gauge **immediately**)	
3 Cage overload indicator	Constant or Flashing amber (Refer to Section 4.5)	
4 Cage overload indicator	Constant green (Refer to Section 4.5)	
5 On/Off Switch	Cage functions **ONLY**	
6 Diesel Glow/Start	Anti-clockwise for **Glow**, Clockwise to **Start** engine	
7 Battery Recharge Lamp	**Flashes** during machine operation to indicate batteries are being recharged	
8 Emergency Stop	**Push** to Stop machine	**Turn clockwise** to Release
9 Drive Speed Selector	**Turn Clockwise -** Slow, Fast and High Gradeability/Off-road modes	
10 Green Power Button	**Push** and hold to activate machine	
11 Diff-lock lamp	Illuminates when Off-road (AWD) mode is selected.	
12 Joystick	Grip the joystick and hold the trigger switch at the front. Machine movement is achieved by slowly moving the joystick away from the neutral position in the required direction. Steer by using the thumb rocker switch located on top of the joystick.	
13 Horn	**Push** to sound	

** Active in Drive mode ONLY

MULTI-FUNCTION DIGITAL GAUGE

Situated on the Cage Control Panel, this gauge provides a warning indication for a range of functions. The red warning lamps on the right hand side indicate a safety critical situation where **immediate** action is required; the amber lamps on the left are advisory. It also displays fuel or battery levels when machine is in operation, automatically reverting to fuel level when diesel engine is started. Refer to diagram below.

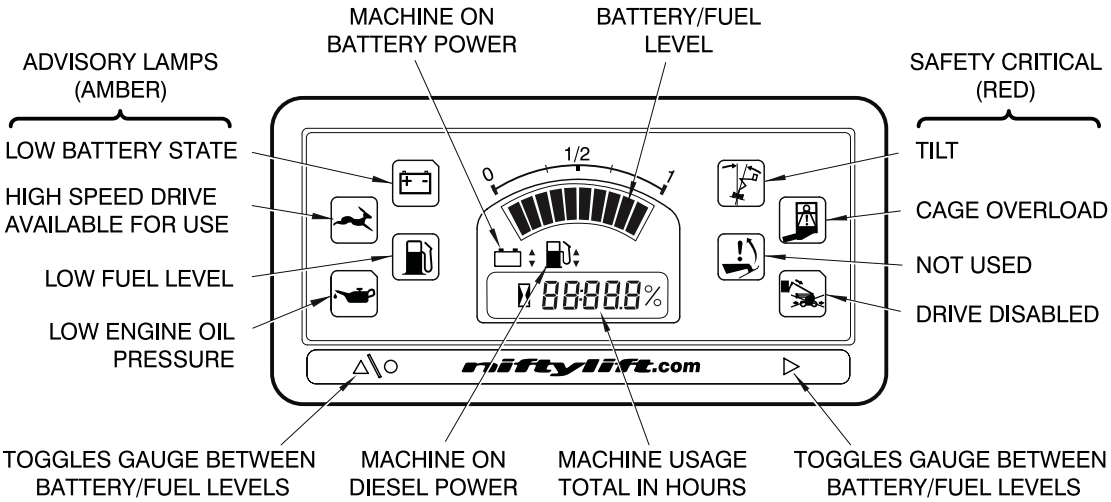

CAGE LEVERS

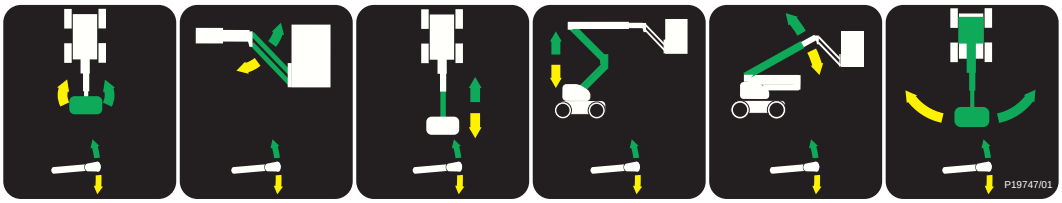

1 2 3 4 5 6

1 Operates Platform Rotation	Up for **Clockwise**	Down for **Anti-Clockwise**
2 Operates the Flyboom	Up for **Up**	Down for **Down**
3 Operates Telescoping	Up for **Tele-In**	Down for **Tele-Out**
4 Operates the Link Booms	Up for **Up**	Down for **Down**
5 Operates the Upper Boom	Up for **Up**	Down for **Down**
6 Operates Swing	Up for **Right**	Down for **Left**

4.3.2 OPERATION

NEVER START THE NIFTYLIFT IF YOU SMELL PETROL (GASOLINE), LIQUID PROPANE OR DIESEL. THESE FUELS ARE FLAMMABLE.

BEFORE OPERATING THE NIFTYLIFT ENSURE THAT EACH OPERATOR HAS READ AND FULLY UNDERSTOOD THE OPERATING MANUAL. FAILURE TO DO SO MAY RESULT IN DEATH OR SERIOUS INJURY.

ALL MODELS

1) Ensure all red emergency stops are out.
2) Turn the **Base/Platform** selector at the ground control station to **Platform** (clockwise).
3) For **Battery** powered operation, go to step 7).
4) For **Diesel** powered operation, go to step 5).

DIESEL ENGINE

5) **COLD ENGINE**: - turn the **Diesel Glow** selector left to engage the glow plug pre-heat system and hold for 10 seconds, then turn the **Diesel Start** selector to the **Start** position (right) and the engine will fire.
6) **WARM ENGINE**: - turn the **Diesel Start** selector to the **Start** position (right) and the engine will fire.

Note: Unless the diesel engine is running, the HR21 Hybrid will automatically default to the electrical power source (battery).

ALL MODELS

7) Depress the footswitch (if available) or push and hold green power button on the platform control box.
8) Select a function and operate the hydraulic control levers in full accordance with manufacturers operating and safety manual.
9) To return control to the base turn **Base/Platform** selector to the **Base** position (centre).
10) When not in use return booms to the stowed position. Turn the **Base/Platform** selector on the ground control station to the anti-clockwise **Off** position, remove key and chock wheels.

ALWAYS ENSURE THE AERIAL PLATFORM IS ON A FIRM LEVEL SURFACE AND THE AREA IS FREE OF ANY OVERHEAD OBSTRUCTIONS.

ENGAGING THE RED EMERGENCY STOP BUTTON WILL SHUT DOWN THE ENGINE, AND THE ELECTRIC CIRCUIT PREVENTING OPERATION OF ANY FUNCTION.

4.3.3 SiOPS™ - LOAD SENSING CONSOLE (If fitted)

WHEN OPERATING THIS MACHINE THE USER MUST BE AWARE OF ANY OVERHEAD OBSTRUCTIONS.

This machine incorporates a load sensing cage console that senses if the operator has been pushed or has fallen against the console. If the load applied to the front of the console is greater than the pre-determined amount, the footswitch will be disabled to increase operator safety and reduce the possibility of sustained involuntary operation of the cage controls.

Note: The green button will illuminate once the footswitch has been disabled, but continues to be available for use at all times. This allows the operator to use the cage control functions and manoeuvre the machine to a safe position.

To reset the footswitch:

1) Release the load from the front of the console.
2) Ensure cage controls are in the neutral position and clear of objects.
3) Raise foot clear of footswitch then lower foot onto footswitch.
4) Footswitch is now active and full control has been restored.

Note: If SiOPS™ has been activated and the footswitch is not reset within **15 seconds**, the blue warning beacon will flash (If fitted, located on underside of the cage) and a warning announcement will sound until the footswitch is reset as described previously.

4.4 DRIVING CONTROLS

DO NOT OPERATE THE NIFTYLIFT WHILST ELEVATED UNLESS ON A FIRM, LEVEL SURFACE FREE FROM ANY POSSIBLE OBSTRUCTIONS OR HAZARDS BOTH AT GROUND LEVEL AND OVERHEAD.

1) Check proposed route for possible hazards, obstructions and personnel.

2) Depress switch located on the front of the joystick.

3) Use the **Drive Speed** selector on the platform control station to determine speed.

   Low Drive (Tortoise) - gives low speed and low engine revs.
   High Drive (Hare) - gives high speed and high engine revs.
   HG Drive (High Gradeability) - gives low speed, high engine revs and high gradeability.

   N.B. High Drive (Hare) is only available when the booms are in the stowed position. The HR21 Hybrid will default to Low Drive speed whenever the booms are elevated.

   If the machine is driven on slopes exceeding 10^0 it automatically reverts to 4WD (Low speed) until the joystick is released.

   Also, the machine has an additional tilt sensor that monitors its inclination whilst driving. If it is driven on slopes exceeding 10^0 the drive speed will automatically revert to HG Drive. To return the machine to High Drive, drive on to level ground ($<10^0$) then release and reactivate the joystick or footswitch.

4) Select drive joystick from the platform control box.

   A. Up for **FORWARD**
   B. Down for **REVERSE**

   Steering is controlled by the rocker-switch button on the top of the joystick

   C. Left for **STEER LEFT**
   D. Right for **STEER RIGHT**

   The driving horn is activated by the button on the front of the joystick and there is also a separate horn button on the platform controls for use when the drive and boom controls are switched off.

5) All control levers give a fully proportional response therefore the more the lever is moved away from the centre **Off** position the faster the function will become.

6) Maximum drive speed is only attainable when all booms are fully stowed and the **Drive Speed** selector is in the **High Drive** (Hare) position.

7) When driving with the booms fully stowed, the Tilt Alarm is bypassed to allow the Niftylift to be driven in areas where the slope exceeds the four-degree working limit. In normal operation the drive is therefore unaffected when driven onto a slope in excess of four degrees, until the booms are raised, whereupon the drive would be disabled and the tilt alarm sounds continuously.

8) **Under no circumstances** should any **Height Rider 21 Hybrid** series machine be driven on slopes exceeding the gradeability in the general specification.

ALL NIFTYLIFTS ARE FITTED WITH A TILT ALARM - PRE-SET IN THE FACTORY. ONCE ENERGISED THE NIFTYLIFT WILL LOSE ALL POWER TO DRIVE FUNCTIONS AND A LOUD AUDIBLE ALARM WILL BE ACTIVATED.

TO DE-ACTIVATE, LOWER THE BOOMS FULLY TO STOWED POSITION AND RE-POSITION BASE ON FIRM, LEVEL GROUND.

IF ALARM SOUNDS - DESCEND IMMEDIATELY AND RE-LEVEL MACHINE BASE.

4.5 CAGE WEIGH SYSTEM

4.5.1 LOAD CELL VERSION

The Niftylift HR21 Hybrid is fitted with an electronic load cell. This load cell is a moment-independent, redundant design. This means that independent of the load position inside the cage of the machine, the actual load is measured and if pre-configured limit values are exceeded, warnings will be activated. “Redundant design” means that the load cell design incorporates dual channels that monitor each other. The design of the unit meets the requirements of both EN280 and EN954-1 class III.

4.5.2 FUNCTION

The machine informs the operator, via the load cell output, of the current state of the machine with regard to cage load. There are three output lamps: **green**, **amber** and **red**. The three lamps for the load cell are located on the cage control panel (see section 4.3.1). These lamps can be interpreted as follows:

Lamp	Description	Load value	Machine Behaviour
Constant green	Load in the cage does not exceed 80% of safe working load	180kg or less	Normal operation
Constant amber	Load in the cage is 80-90% of safe working load	180kg to 203kg	Normal operation
Flashing amber	Load in the cage is 90% of safe working load	203kg to 225kg	Normal operation
Flashing red (Safety Warning Lamp)	Load in the cage has exceeded safe working load	Above 225kg	Controls isolated – safely remove excess load to restore normal operation

4.5.3 CALIBRATION, INSPECTION AND MAINTENANCE

Calibration, maintenance and repair of the Niftylift HR21 Hybrid cage load cell requires specialist knowledge and equipment. **For this reason, no part of the Niftylift HR21 Hybrid cage-weigh system can be adjusted, repaired or inspected by the operator.**

All enquiries relating to calibration, inspection or maintenance should be directed to Niftylift or one of Niftylift’s approved dealers. Contact details are listed in Section 1.4

4.6 BATTERIES AND CHARGING

BATTERIES MUST BE RECHARGED IN A WELL-VENTILATED AREA FREE OF FLAME, SPARKS OR OTHER HAZARDS THAT MAY CAUSE EXPLOSION. HIGHLY EXPLOSIVE HYDROGEN GAS IS PRODUCED DURING THE CHARGING PROCESS.

1) Recharge batteries at the end of every working day or shift.

   (**Note:** To recharge batteries fully from flat takes approx. 12 Hours, this consists of 8 hours bulk charging plus 4 hours equalisation. The recharging time can be reduced to approx 4- 6 hours by running the engine whilst charging).

2) Plug charger into suitable power supply, either 240 volts or 110 volts AC (see **Charging Limitations**). (Note: If using 240V, use of a suitably rated Earth Leakage Circuit Breaker (ELCB) or Residual Current Device (RCD) at the point of supply is highly recommended.)

3) Take note of the indicators provided:

   DIGITAL CHARGER

   Amber lamp - Batteries are charging.
   Amber lamp & Green 80% lamp - Batteries are charging and between 80% & 100% capacity.
   Green 100% lamp - the batteries are fully charged.
   Red lamp – Fault (see 'Charging Limitations')

IF USING THE TRANSFORMER TYPE CHARGER, UNDER NO CIRCUMSTANCES SHOULD BATTERIES BE LEFT ON CHARGE FOR PERIODS IN EXCESS OF 24 HOURS

4) **DISCONNECT FROM POWER SUPPLY ONCE BATTERIES ARE FULLY CHARGED.** The machine can now be left unattended, however, in the event of the machine being left unused for extensive periods then a **4 to 6 hour** 'top-up' charge every **4 weeks** is recommended. A 'top-up' charge the day before use ensures a full day of operation from the machine.

UNDER NO CIRCUMSTANCES SHOULD A MACHINE BE LEFT FULLY DISCHARGED AS SEVERE BATTERY DAMAGE CAN OCCUR IN A RELATIVELY SHORT TIME.

5) To avoid damage to charger disconnect from mains supply before using machine.

Notes:

1) If the charger is reconnected to the power supply shortly after it has gone through its full charging cycle, the charger will show an Amber light, immediately followed by the Green 80% lamp. The charger would then go through its complete cycle again at an accelerated rate, depending on the time difference between connection, reconnection and level of battery charge.

2) Some machines are fitted with a Battery Management System, which permanently monitors the condition of the batteries. When the batteries become discharged to 20% of their capacity the management system will begin to "shut down" the hydraulic power packs. This causes the drive/boom operating system to alternately stop and start, signalling to the operator that re-charging is necessary. However, there is sufficient power remaining to enable the operator to drive slowly to the nearest charging point.

3) During normal machine usage with the engine running, the batteries are on continuous recharge, except when the control system decides that additional electric power is required in order to maintain drive/function speed.

Should the operator ignore the onset of the battery discharge warning the "shut down" of the motors will continue, until the machine is rendered in-operative. **Immediate charging will then be required.**

CHARGING LIMITATIONS

Digital Charger: - The capacity of the 110V supply must be capable of 2kW (16A current); hence a small hand-tool transformer must **not** be used with the battery charger.

Digital Charger Fault Conditions

Red LED status	Description
Constant **ON**	Defective battery pack or cell
Single flash	Output open circuit or short circuit, or output terminals are reversed. Battery voltage is too high (Possibly incorrect voltage battery)
Double flash	22 Hour timer has deactivated charger due to a battery problem

Attention should also be given to the use of extension cables as power leads. Excessive cable lengths from the supply point to the battery charger will result in significant voltage drop, leading to a reduction in the chargers efficiency. In addition, inadequate sized cable cores will have a limiting effect on its current carrying capacity, which will again lead to a reduction in the chargers efficiency. Both of these can result in over-heating of the cable with an increased risk of fire, short circuits or damage to the components themselves.

The charger requires a minimum battery voltage of 4.5 volts per battery (overall for two batteries 9 volts, for 4 batteries 19 volts for 8 batteries 38 volts). If the voltage is below these values then the charger will not function (Charger will not detect batteries to begin charge.) If the batteries have fallen to such a poor state they will have to be removed from the machine and charged individually with an independent charger until the optimum voltage has been reached. This is best performed at very low currents to 'recover' the batteries if sulphation has already started i.e. a 'trickle' charger. This can take several hours, possibly days. Careful monitoring of the rise of battery voltage will indicate when recovery has been achieved.

BATTERY CONTROLLER

This machine is fitted with a Battery Management System that monitors battery condition. A main component of this is the Battery Controller Unit. If for any reason the battery controller circuit has been disconnected, please ensure that the batteries are **fully recharged** before using the machine as this enables the Battery Controller Unit to reset automatically.

Note; this requirement does not apply if the battery isolating handle (Anderson connector) ***ONLY*** *has been disconnected.*

The Battery Controller Unit has been calibrated to function correctly with Niftylift factory fitted batteries. If for any reason you suspect **any** of the batteries have been replaced with a non factory fitted unit then please contact the Niftylift Service Department on (44) 01908 857899, Fax: 01908 227460. As machine performance will be severely affected.

TOPPING UP

During the course of normal operation, the batteries should be inspected at least once a fortnight to check the level of electrolyte. During the end of charge, gassing takes place, which will cause a slight reduction in the volume of acid in the battery. This can be topped up with de-ionised water as required. During this inspection, it is useful to note any imbalance in the fluid levels. One indication of a faulty cell would be an increase in the loss of battery acid, which would then require more frequent topping up on that cell, or cells. Faulty cells can liberate excess hydrogen, even during normal operation, with the resulting risk of explosion if ignited. **Any faulty batteries should be replaced as soon as possible with an equivalent sized and rated unit.**

Note: BATTERIES CONTAIN ACID; therefore, protective safety glasses and gloves (Appropriate PPE) MUST be worn whilst performing these checks.

4.7 TRANSPORTING, CRANEAGE, STORAGE AND SETTING TO WORK

4.7.1 TRANSPORTING

The following guidelines should be adhered to ensuring safe transportation of the work platform. Cross loading between transport locations is the most frequent cause of problems, as the method of loading is no longer in sight of our own personnel. The recommendations made herein should be passed on to subsequent carriers, such that the entire journey is carried out without incident. Ensure these guidelines are **read and understood** before lifting or restraining the machine.

- Always ensure the truck or trailer you are loading or towing the Niftylift with can carry it legally.
- If loading by crane the use of shackles and an adequately rated spreader beam, with four leg slings, is **MANDATORY.**
- When loading or un-loading from the side of the vehicle, the use of the forklift pockets to retain one of the forks is recommended. (If fitted). Spread the forks to their widest capacity, with due regard to the components fitted to the machine. Never forklift or crane an entire machine under the booms, always lift beneath the spine or under the ends of the axle mountings in the case of a self-propelled unit. Ensure forklift is adequately rated for the load to be carried.
- Once positioned on the transport carrier ratchet straps should be used to secure the machine. The machine should be positioned to allow easy access around the machine in transit, and to ensure that 'creepage' during transport does not permit the machine to come into contact with other goods being shipped, or the container itself. Some movement of the machine structure might occur during transit, which could lead to fretting or other damage.
- If the machine is equipped with a transit device such as a boom clamp etc, this should be securely applied.
- Strap booms carefully to constrain them from sideways movement. When using straps or chains, adequate packing should be applied to stop any damage to the structure and paintwork. Due regard of the movement of the straps or chains must be taken into account.
- Where a machine has designated points for strapping, lifting or forking, these can be used for tie-down duty. When they are absent, the major structure of the platform can be used, giving due consideration to the design and function of the area chosen. Where possible, use the spine of the machine or axle mounts over which to apply the holding down forces. Using a single plate, such as an outrigger or stabiliser support plate might be unsuitable. If the component was clearly not designed to accommodate a side load, one should not be applied.
- Under no circumstances should straps or chains be applied over booms or through the cage support structure or the cage itself. The relative strength of the carrying structure is not conducive to the massive forces capable of being applied through ratchet chains or slings. Severe damage to the steelwork can be caused, as well as deformation to sensitive mechanisms such as cage weigh assemblies, which would render them useless. Such catastrophic damage to an electronic load cell would require the component to be replaced before the machine would function.

Do not tow machine without first following the towing procedure described in Section 5.5 of this manual.

4.7.2 CRANEAGE

1) Observe all of the limitations relating to straps and chains stated above under 'Transporting'. (4.7.1)

2) When utilising the designated lifting points never apply a 'snatch' load, i.e. lift slowly to take up the load before raising. Similarly, do not drop machine when positioning after lifting.

3) If the machine is to be lifted by crane, use the designated lifting points and observe the recommendations regarding spreader beams. Individual drawings are available for each machine type, on request. (See list below.)

D80461	HR10/12
D80935	HR15N
D81301	HR17N
D80936	HR15 4x4
D80937	HR17 4x4
D80938	**HR21**

4.7.3 STORAGE

If being stored for any length of time without use, then the machine should be thoroughly inspected for the following:-

1) Grease all bearings /slides, worm drives, etc.

2) If machine is to be left on an incline, chock wheels to prevent creep.

3) If machine is to be left outdoors or in a hostile environment, cover with suitable weatherproof media to prevent deterioration.

4.7.4 SETTING TO WORK

If your machine has arrived direct from the factory or via a dealer, then it may safely be put straight to work. However, if the machine has been in storage or if unsure about the machine's recent history then a full safety check should be made:

1) Check all lubrication points for adequate application of grease, oil etc.

2) Inspect all threads for ease or operation - especially descent valves, brake release valve etc.

3) Check level and quantity of oil. Remove any contaminants - water, etc.

4) Check battery for electrolyte & state of charge.

5) Check electrics for damage & insulation.

6) Using base controls, cycle machine over complete envelope in accordance with the Operating Instructions. Cure any defects.

7) Ensure that all safety devices and controls operate in accordance with the instructions.

8) If necessary, perform a load test to establish the machine stability before putting the machine to work.

9) On completion of an extended period of road transport, the machine might need additional inspection to identify any transit degradation, which could render the machine unsafe. Perform a P.D.I. inspection on the unit before it enters service. Record any faults found and rectify them immediately.

10) If left un-attended for an extended period, it is likely that the hydraulic cage levelling will become un-pressurised. Normal operation is then lost, with a noticeable delay in the forwards or backwards motion as the booms move. To restore normal function, the cage needs to be fully levelled forwards and backwards, using the cage-levelling lever whilst **not** standing in the cage (i.e. with the operator standing adjacent to the cage side whilst simultaneously operating the lever and green button to move the cage). Take care not to become trapped between the moving cage and a fixed object, and ensure those around you are clear of the moving cage. When the system has been charged in both directions, the cage levelling function should be restored. If the system operates but is 'jerky' in either direction, this indicates air in the system. Repeat the procedure as described above until the movements are smooth and un-interrupted. If in doubt, contact our Service Department for further advice.

Niftylift Limited is not liable for any third party damage caused during transport. Careful attention to correct procedures will prevent many of the small snags that can happen in transit. Re-work is both expensive and time consuming. A defective machine arriving at the place of work is a poor advertisement for our product, the company's reputation and those of our dealers and clients. The responsibility for safe and damage-free transport rests with the haulier or his representatives.

5 Emergency Controls

5.1 GENERAL

CHECKING THE OPERATION OF THE EMERGENCY CONTROLS EVERY DAY AND/OR BEFORE EACH SHIFT IS AN ESSENTIAL PART OF THE OPERATOR'S DUTIES

The operator and all ground personnel must be thoroughly familiar with the location and operation of the **EMERGENCY CONTROLS**.

5.2 IN THE EVENT OF AN INCAPACITATED OPERATOR

Turn the **Base/Platform** selector at ground control station to **ground** (clockwise). Lower on ground controls as detailed under Section 4.2 Ground Control Operation.

5.3 IN THE EVENT OF MACHINE FAILURE

If all machine power is lost, the **Manual Hand pump** can be used to provide the hydraulic power to manoeuvre the machine. Lower platform using hand lever controls at ground control station. If initial movement of the machine allows the master alarm to reset, normal controls will be available. This is then the fastest method of lowering the platform to the ground.

Note: If the machine is fitted with a cage overload system, and the cage comes into contact with a fixed object whilst operating at height, this would be detected as an overload condition. All power to the machine controls would be lost, requiring the machine to be recovered using the **Manual Hand Pump**. It is sufficient for the cage to be manoeuvred away from the collision point to re-set the cage weigh mechanism, thereby restoring normal machine operation. The cage could then be lowered using the controls as described previously.

Opening the nearside machine canopy reveals the ground controls, plus the dedicated hydraulics for the Emergency recovery of the machine.

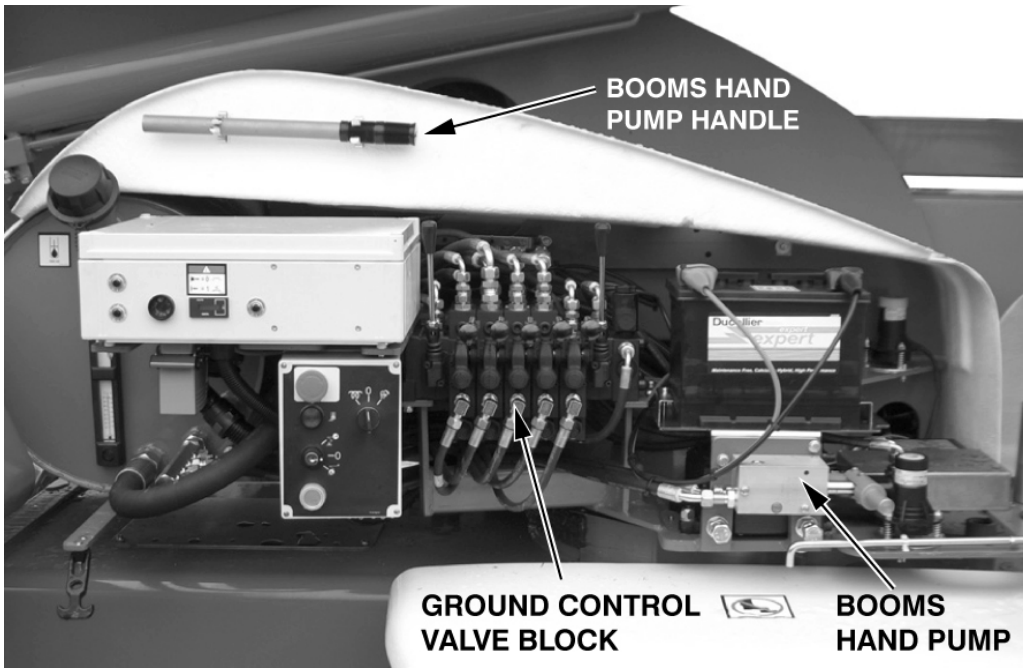

5.4 BOOM CONTROLS

On opening the canopy cover, the hand pump handle is revealed. Remove the handle and fit it to the hand pump as shown. When the handle is actuated, hydraulic flow is generated and will be supplied directly to the ground control valve block. Operating the ground control lever will permit the machine to be manoeuvred by the ground personnel.

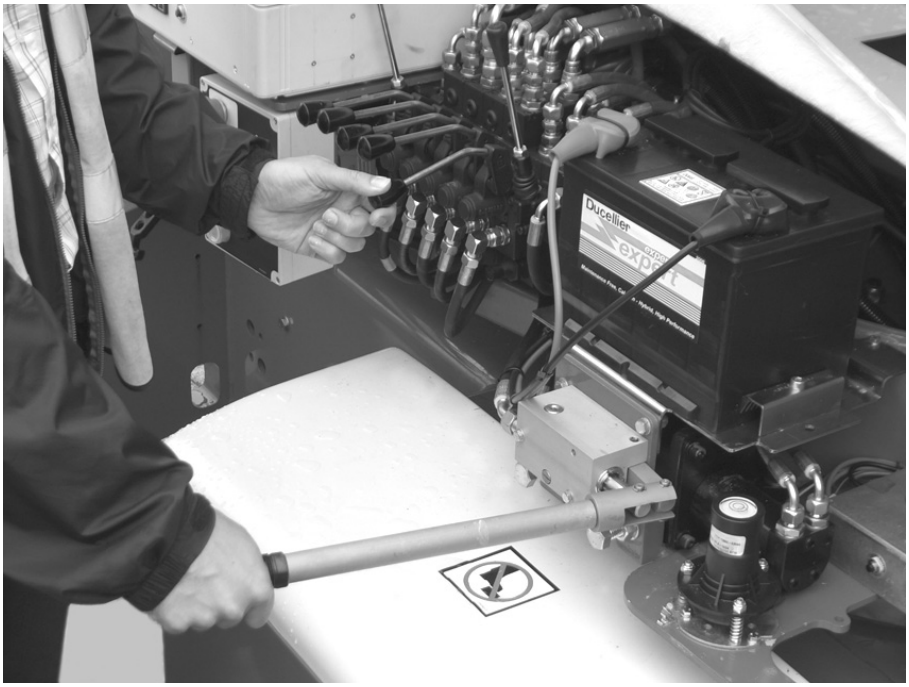

If desired, the Cage operator can hold the appropriate lever to manoeuvre the machine, whilst a ground operative provides the motive power using the manual hand pump. When not in use, the handle should be stowed back in its clips.

FOLLOWING AN EMERGENCY DESCENT RECOVERY OF THE PLATFORM, FULLY EXTEND AND RETRACT ALL CYLINDERS FROM THE GROUND CONTROL STATION BEFORE USING THE MACHINE.

5.5 TOWING

Towing the Niftylift in case of an emergency. If necessary, chock the wheels before carrying out any of the following actions.

5.5.1 GEARBOX DISENGAGEMENT

In order to safely tow the HR21 Hybrid, the drive mechanism and parking brakes will need to be bypassed. The drive gearboxes located on the front and rear wheel hubs must be disengaged as follows;

1) Remove both retaining bolts that secure the cover disc to the centre of the wheel hub.
2) Partially screw one of the retaining bolts into the end of the central disengage pin and pull the pin out fully, ensuring the recess on the pin is visible.
3) Place the cover disc over the pin, ensuring the retaining disc is engaged in the pin recess and secure in place using the remaining retaining bolt.
4) To re-engage the gearbox complete the above instructions in reverse order, ensure gearbox drive is free to engage before pushing the pin 'home'. If necessary, jack up each wheel & rotate slightly to allow re-engagement of pin.

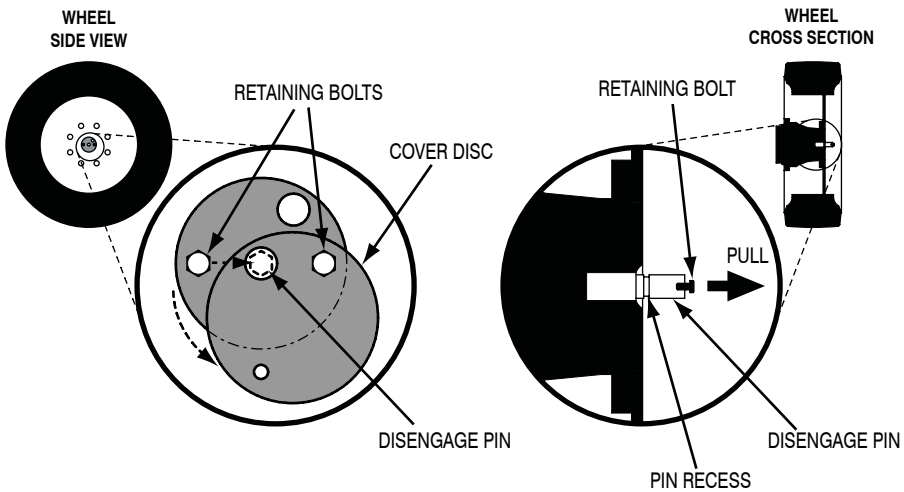

Damage caused by failure to comply with these procedures will not be covered by the manufacturer's warranty.

5.5.2 STEER OVERRIDE

The machine can be steered from the ground control station (see Section 4.2). This function is provided to allow correct front wheel alignment prior to towing. To operate, move the lever **up** for steering **left**, or **down** for steering **right** whilst operating the hand pump.

ENSURE MACHINE IS STATIONARY BEFORE OPERATING AS SERIOUS INJURY OR DEATH MAY OCCUR.

5.6 INCIDENT NOTIFICATION

It is a mandatory requirement that any accident or incident involving a Niftylift, regardless of whether any party received injury or property was damaged is reported by telephone directly to Niftylift. Failure to do so may render any warranty on the machine void.

6 Responsibilities

6.1 CHANGES IN OWNERSHIP

When a change of ownership of a Niftylift occurs, it is the responsibility of the seller to notify Niftylift direct of the unit, model and serial number and the name and address of the new owner within 60 days. This important step is required so that all future Technical Bulletins are able to reach the registered owner of each machine without delay. Please note warranties are not transferable.

6.2 MANUAL OF RESPONSIBILITIES (USA only)

You are required by ANSI/SIA 92.2 1990, to read and understand your responsibilities before you use or operate this aerial platform. Please read the enclosed document, as failure to do so could result in death or serious injury. Wherever any contradiction may appear, the Manual of Responsibilities shall take precedence over all other documents.

6.3 Inspection/Service/Pre-Hire Check list

MACHINE SERIAL NO _____

TOWING	PASS	FAIL	N/A
Machine secured on trailer			
Straps correctly positioned and tightened			
Wheels chocked if necessary			
AXLES, WHEELS AND BRAKES			
Wheels are secure, tyre condition acceptable			
Wheel bearings O.K.			
Brake linkages and cables secure			
Brake shoe wear not excessive			
Machine climbs slope			
Brakes hold machine on slope			
Rear hub nut secure			
Track rod secure, not fouling axle plate			
BASE			
Operation of ground control valve and buttons			
Operation of all booms over full range			
Wheel bearings OK			
Cylinders are silent			
Platform is level over full range			
Booms, levelling rods not damaged or distorted			
Booms levelling rods, cylinders not fouling			
Hoses not tight, kinked or fouled			
Operation of manual hand pump			
SLEWING			
Slew assembly and motor are secure			
Worm/wheel mesh correct, no excessive wear			
No end float of worm in housing			
Slew wheel bolts secure			
Slew guards secure			
PLATFORM			
Operation of control valve and buttons			
Levelling lock valve holds in both directions, lines vented			
Operation of all booms over full range			
Cylinders are silent			
Platform levelling over full range			
Slewing smooth over full range			
Operation of boom 4 over full range (if fitted)			
No excessive movement of boom 4 and boom 3			

TILT ALARM	PASS	FAIL	N/A
Booms raised on slope - drive disabled, siren tone constant			
Boom operation unaffected			
Booms lowered - drive restored			
INTERNAL (POWER PACK)			
Power pack and all components secure			
All cables and terminals secure			
All hose connections secure			
Hoses not kinked or fouled			
Charger/control box secure			
Batteries secure			
Electrolyte level and specific gravity			
Charger operation			
Hydraulic oil level			
Engine/Gear box oil			
FINISH			
Pivot pin tag bolts			
Correct decals, all visible			
Canopy/bonnets			
Grease nipples (Feet, Knuckle, Centre Post)			
LEAK CHECK			
Cylinders (Lift, Jacks, Telescope, Levelling)			
Control valves			
Check valves			
Power pack/pump			
Slew motor			
Hose connections			
Filter			
Wheel motors			

Comments, remedial work required etc;

INSPECTED BY: _____ **DATE:** ___/___/___